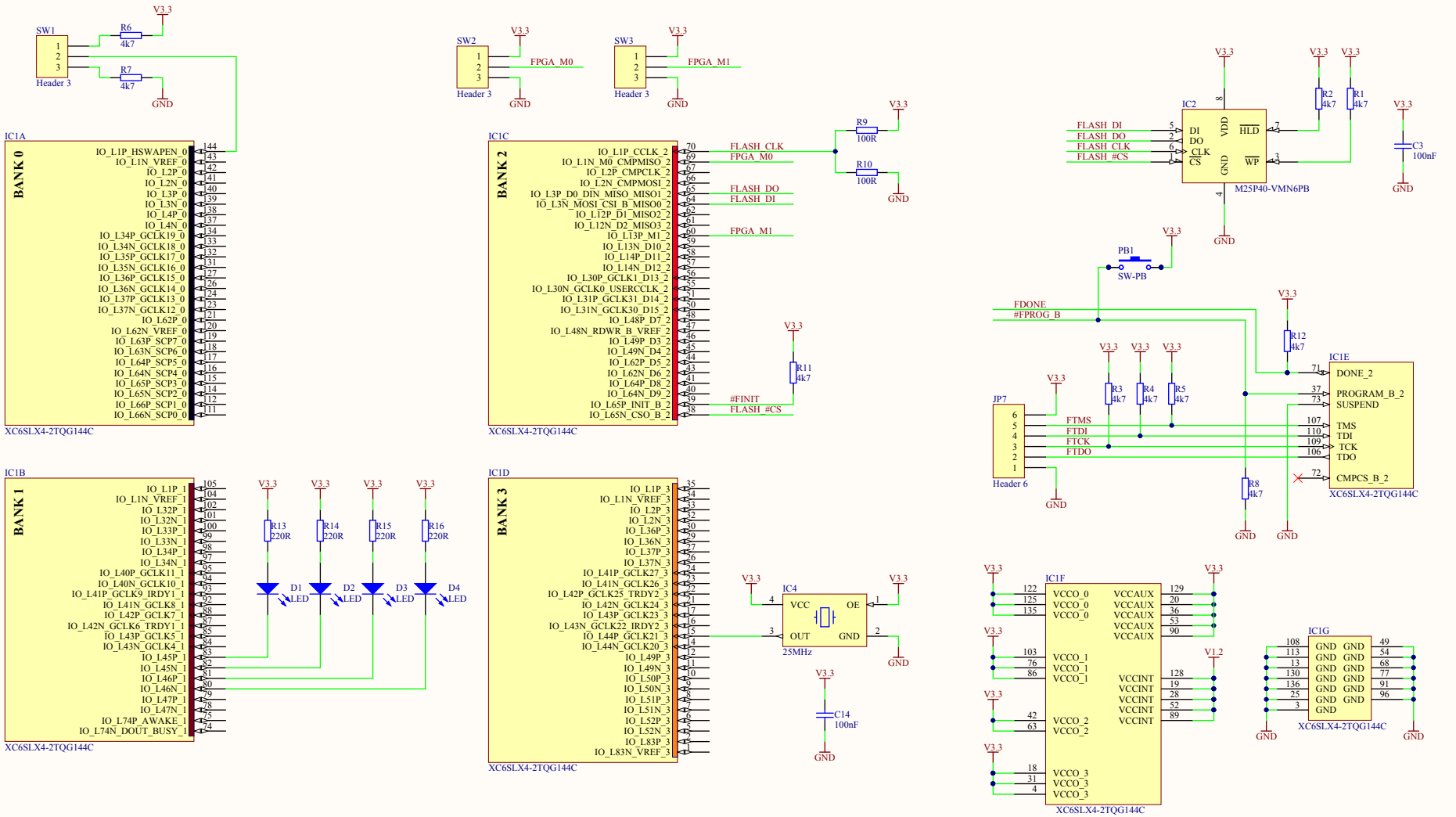

Title		
Size A3	Number	Revision
Date: 15.3.2013		Sheet of
File: E:\Work\..\Vinco_EXP.SchDoc		Drawn By: